Jegatron Electronics

BBB, Bestest Button Brick - Design Description

Background

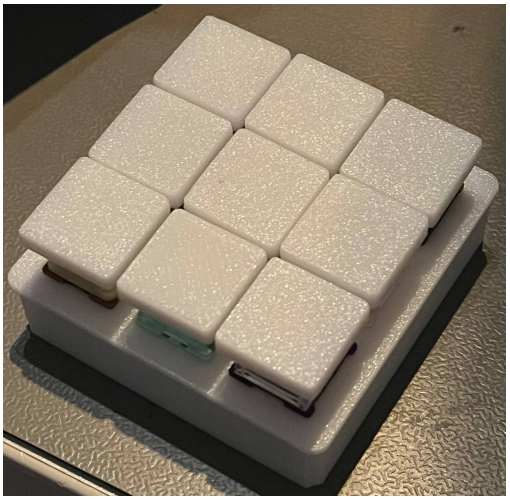

Figure 1: First iteration of BBB

The BBB is a multipurpose user programmable input device and also serves as an exercise product to hone my skills and try out different circuit solutions. Not all features and component make sense from a real product perspective, but serves as a learning experience.

It all started with the desire to have a more professional feel to my hobby and learning projects. So instead of using the classical tactile buttons forced down into a breadboard entangled in jumper wires, I bought some random mechanical keyboard switches and 3d-printed an enclosure for them. Then came the time to make the circuit board to empower this.

Feature creep. That is the spirit of this project. Because of personal projects I need the BBB need to be Zigbee enabled and preferably also wifi capable. Since I had already used the ESP32-C6 for such purposes I decided to use this.

Features

- Nine user programmable buttons
- ESP32-C6 - Zigbee, Wifi, BLE etc
- LiPo charger with Power Path
- USB-C sink IC
- LED lights

Contents

Background **1**

Features **1**

Hardware design **3**

Desired features 3

Optional Subsystems 3

Power requirements 4

Charger Circuit – BQ25601 4

USB-C Sink Controller – FUSB303B 4

Fuel Gauge – BQ27441-G1 4

3V3 Buck-Boost Regulator – TPS63900 . . . 4

5V Boost Regulator – TPS61092 4

LED – WS2812 4

Speaker amplifier – MAX98357A 4

MCU – ESP32-C6 4

Flash – W25Q64JV 4

Hardware design

The hardware architecture can be seen in figure 2. The design can definitely be made more simple and cheap, but that is not the purpose of this project. However, several of the parts can be skipped if not desired.

Desired features

- Zigbee
- Wifi
- Battery powered long life
- USB-C powered / charged
- LED lights

Optional Subsystems

The following parts can be not-mounted or replaced with something else:

- USB-C Sink controller: Can be replaced by resistors.
- Fuel Gauge: Can be removed and the battery power can be bridged directly to the charger
- LiPo Charger + LiPo battery: Can be removed. System power directly bridged from VBUS.
- Boost regulator + LED Matrix: Can be skipped
- Miniature speaker: Can be skipped
- Flash: Can be avoided if using ESP32-C6FH4 or ESP32-C6FH8 instead

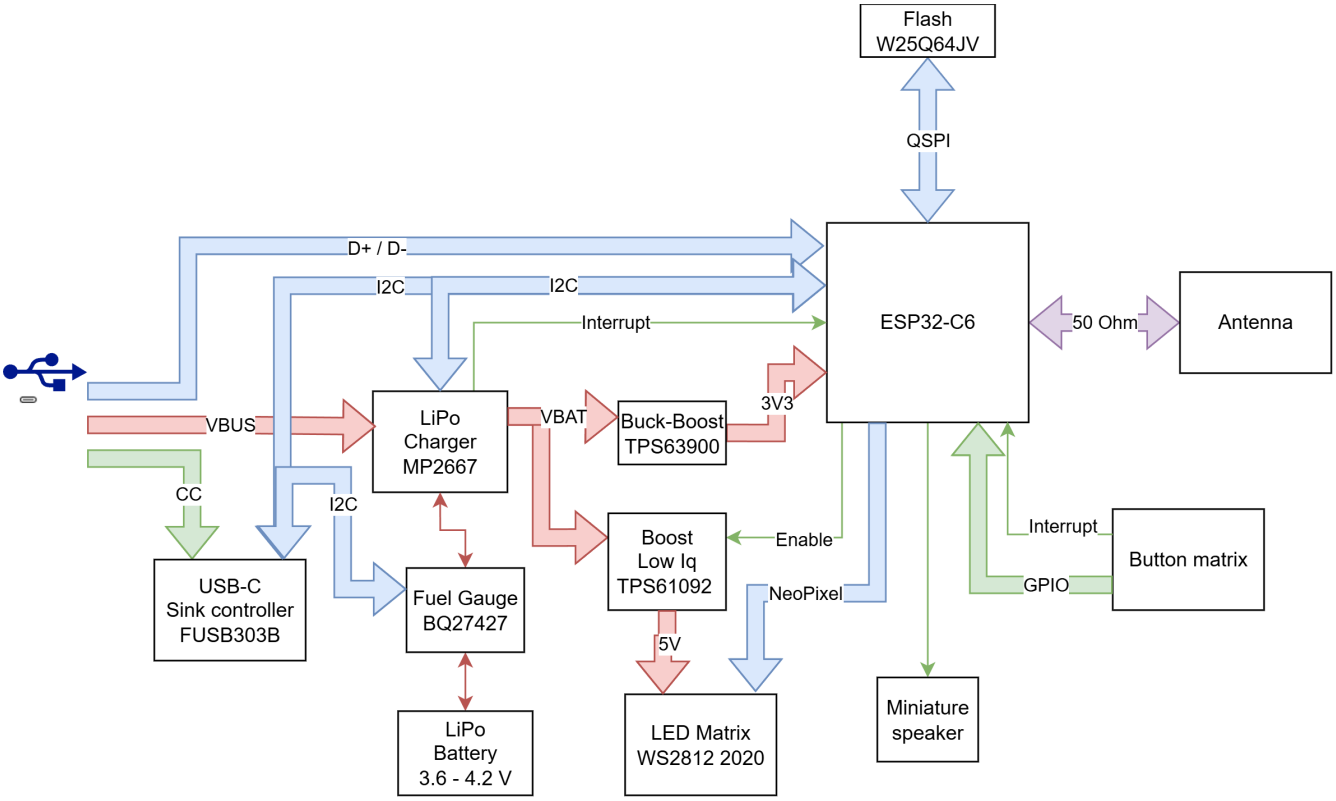

Figure 2: The hardware architecture of the BBB

Power requirements

Before any parts of the circuit can be properly designed, we need to determine the power and current requirements throughout the system.

The maximum peak current consumption of the ESP32-C6 is during WiFi transmission, which can be up to 354 mA at 3.3 V which is about 1.2 W [1, p. 66]. The average power consumption will be much lower than this, but we need to design the power system to be able to handle this peak.

Each WS2812 2020 LED consumes about $3 \times 12\,\text{mA} \approx 40\,\text{mA}$ at full brightness. Which for the full matrix of 9 LEDs would be about 360 mA, which at 5 V would be 1.8 W [2].

A speaker such as https://www.electrokit.com/en/miniatyrhogtalare-8ohm-1w-11x15mm driven with a MAX98357A class D amplifier can consume up to 1 W at 5 V, which is about 200 mA. It is possible to run it directly from V_{SYS} from the battery but it cannot output the full power. And since the 5 V boost regulator will be able to handle 1.5 A when fed with 3.6 V from the battery I decide to put it on the 5 V rail.

Subsystem	Voltage	Peak Current	Peak Power
ESP32-C6 (WiFi TX)	3.3 V	354 mA	1.2 W
LED Matrix (9x WS2812)	5 V	360 mA	1.8 W
Speaker (MAX98357A)	5 V	200 mA	1.0 W
Total			4.0 W

Table 1: Peak current and power consumption summary

A 500 mAh battery might fit into the enclosure, and with an allowed discharge current of 2 C it will only be able to provide max 3.6 W. So not all things will be able to run at full power at the same time, but that is not a requirement for this project.

Charger Circuit – BQ25601

Other candidates were MP2667, which has better quiescent current but no OTG and BQ25895 but it has D+/D- pins which I require for other purposes.

Should I make use of the shipping mode for the battery?

PENDING

USB-C Sink Controller – FUSB303B

Fuel Gauge – BQ27441-G1

Another option might have been BQ27427, but it is bga.

3V3 Buck-Boost Regulator – TPS63900

5V Boost Regulator – TPS61092

LED – WS2812

Speaker amplifier – MAX98357A

MCU – ESP32-C6

Flash – W25Q64JV

The QSPI pin mapping to the ESP32 is described in the datasheet [1, p. 32].

Datasheet [3]

References

[1] *ESP32-C6 Datasheet*. Version v1.4. 2025-11-20. URL: https://documentation.espressif.com/esp32-c6_datasheet_en.pdf.

[2] World Semi. *WS2812 Product Page*. URL: http://www.world-semi.com/web/index.php?topclassid=16&classid=302&id=223.

[3] *W25Q64JV Datasheet*. Version M. 2024-12-24. URL: https://www.winbond.com/hq/product/code-storage-flash-memory/serial-nor-flash/?__locale=en&partNo=W25Q64JV.